VARIOGLASS®

S321

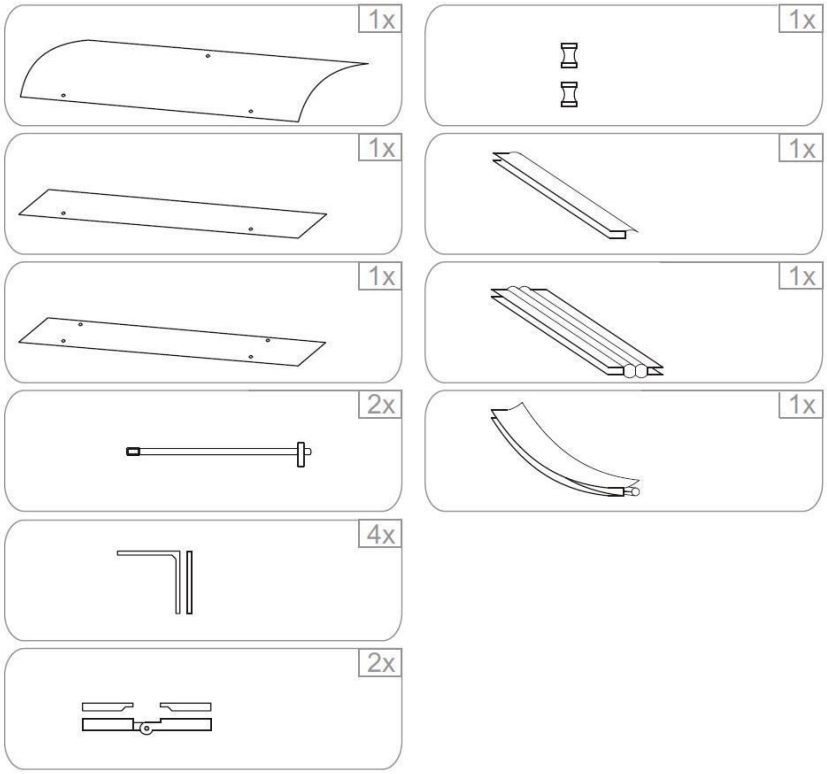

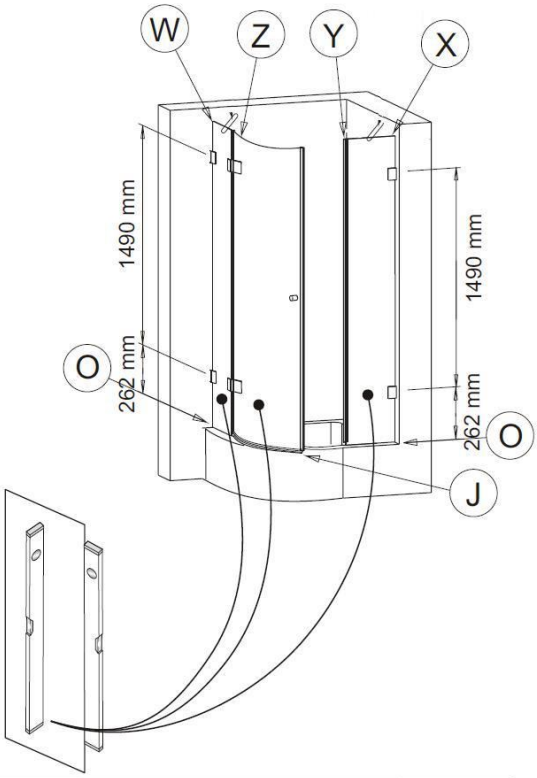

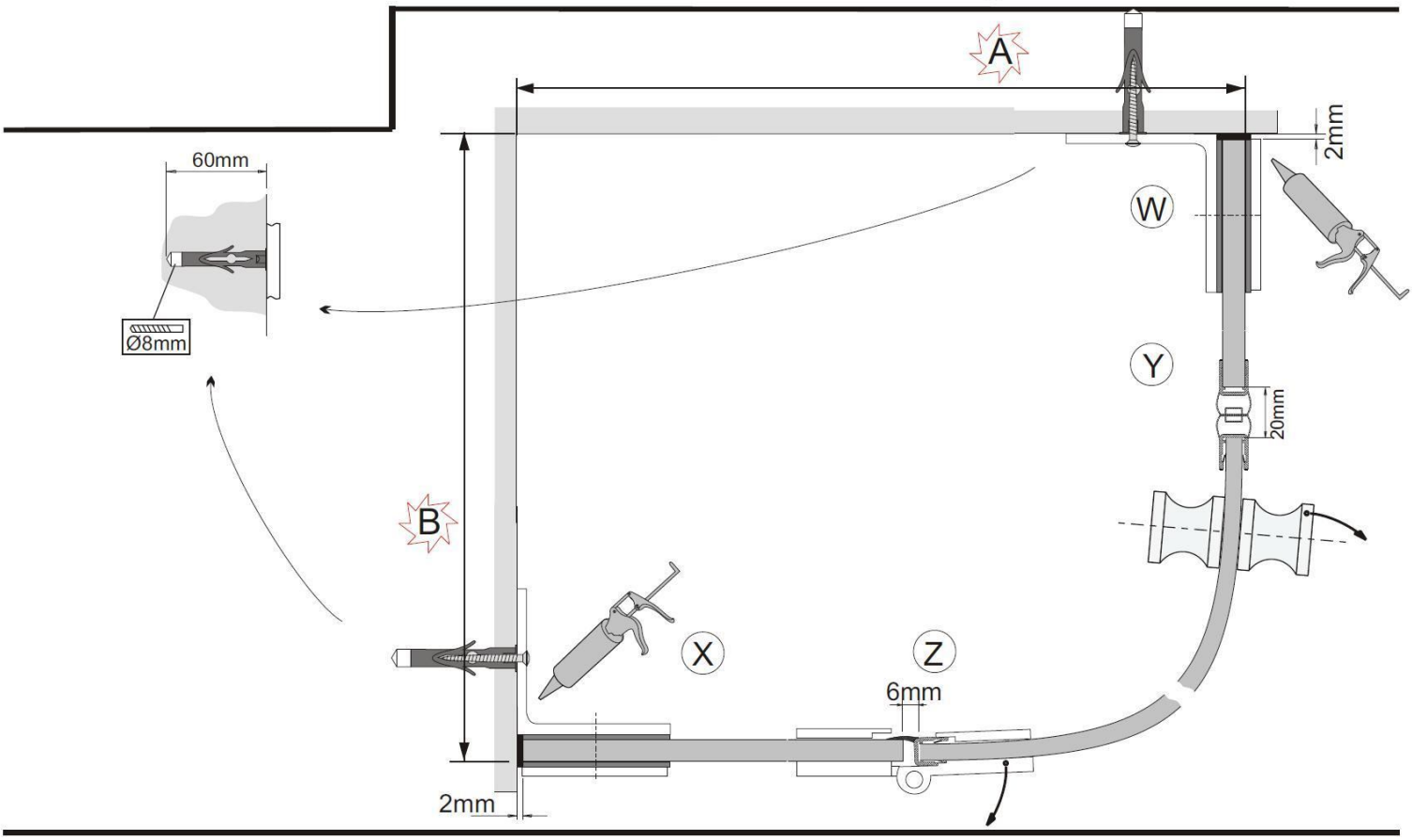

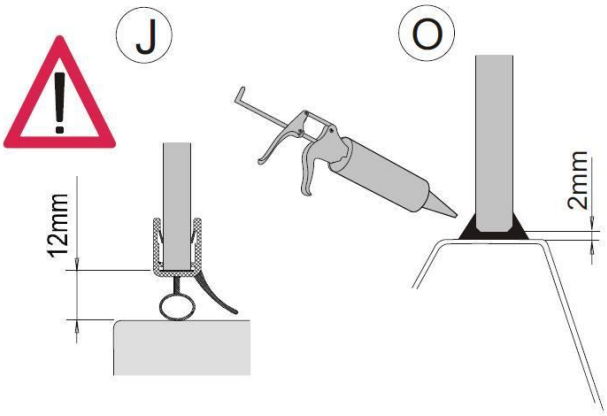

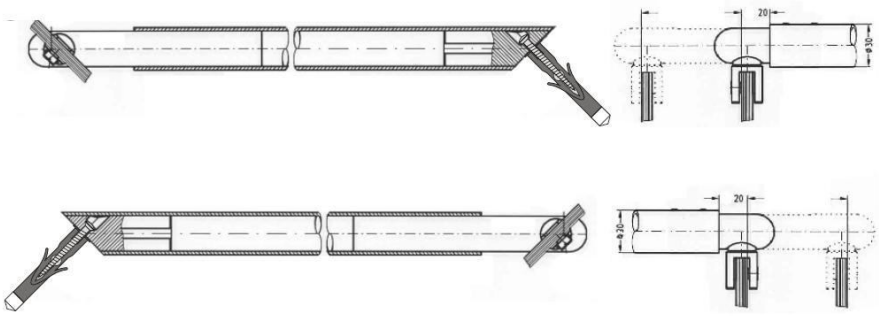

VARIOGLASS®

S321

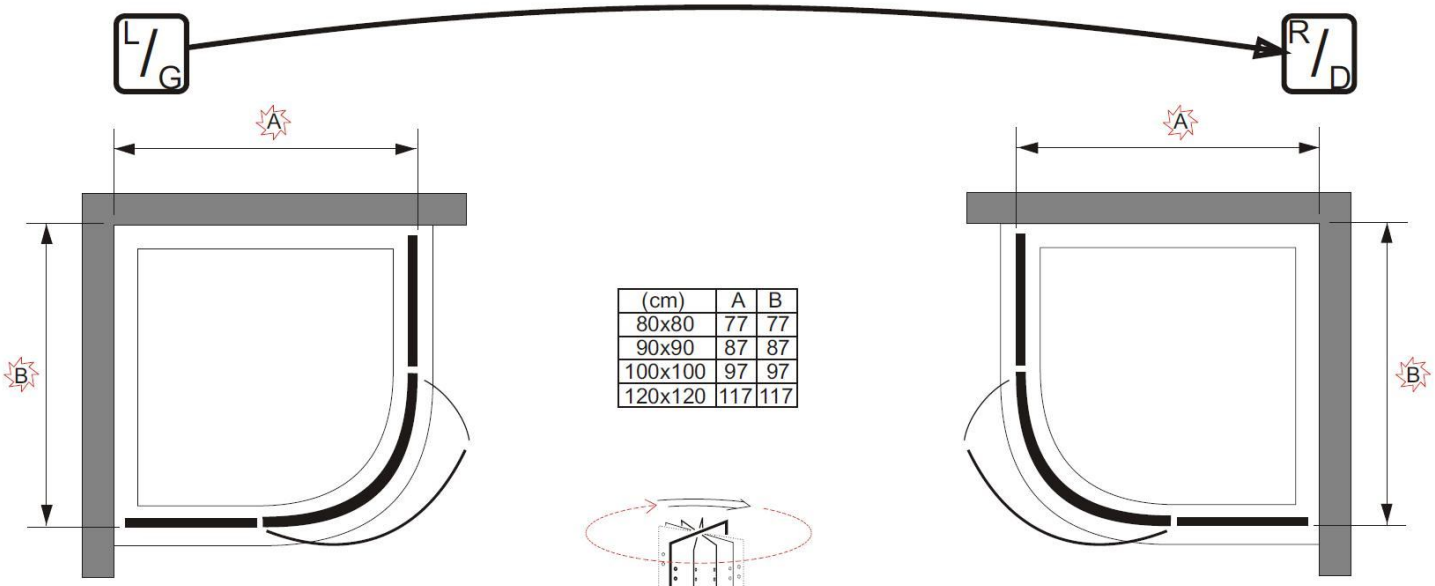
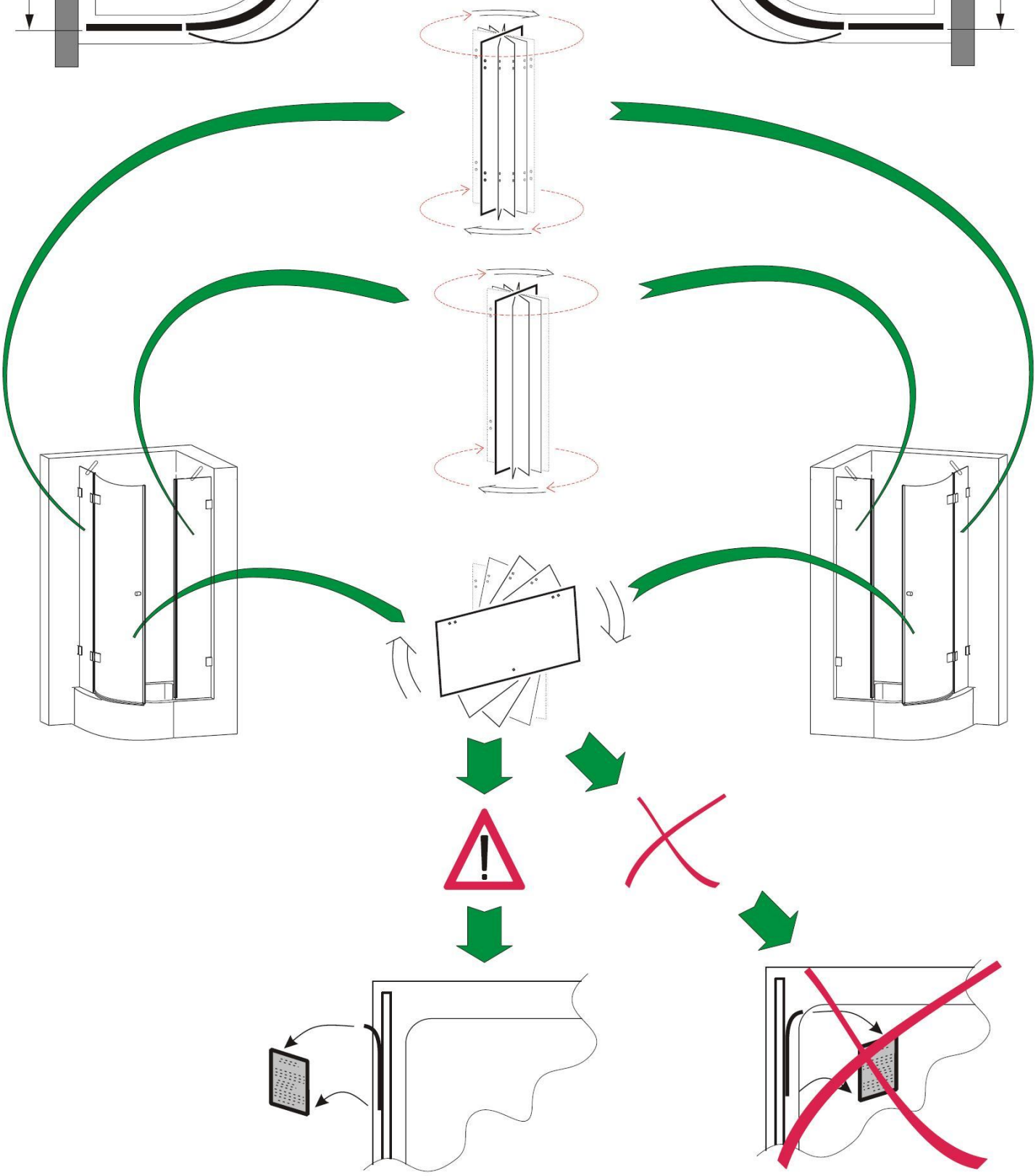
(cm)	A	B
80x80	77	77
90x90	87	87
100x100	97	97
120x120	117	117