VARIOGLASS®

201

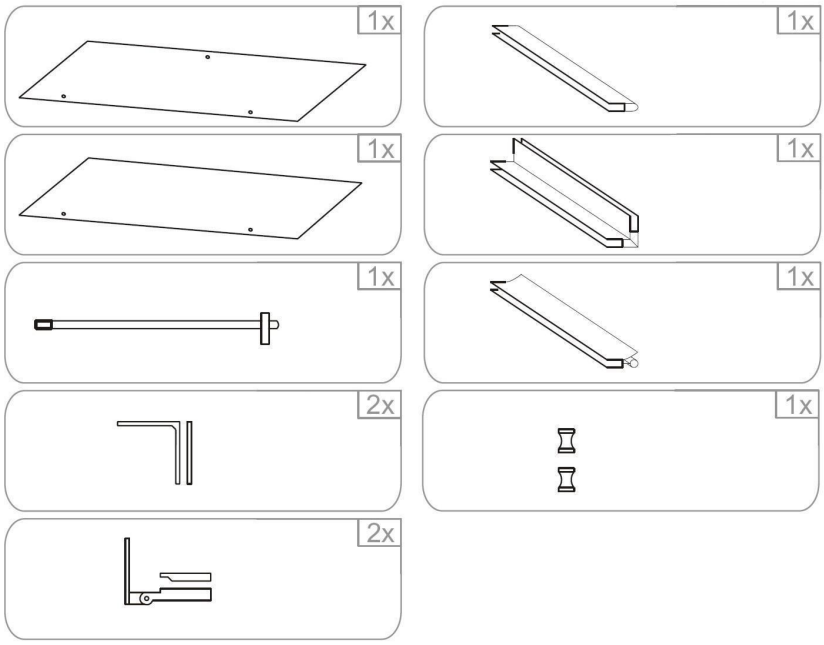

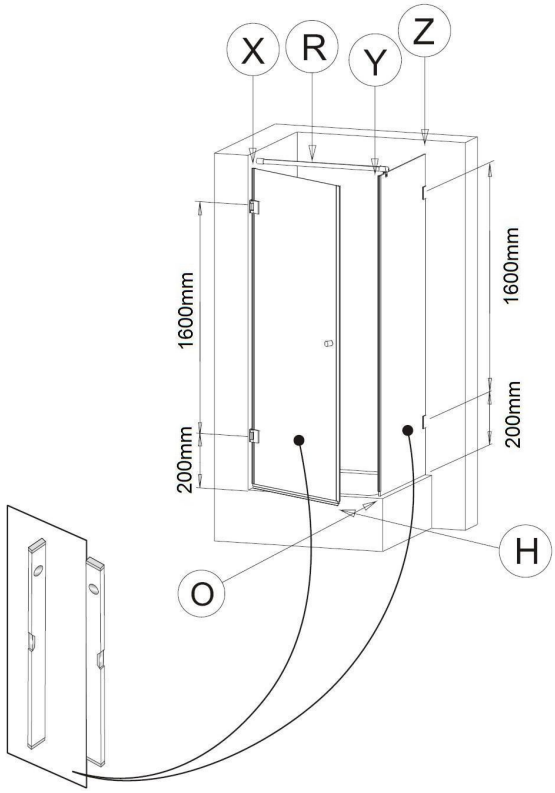

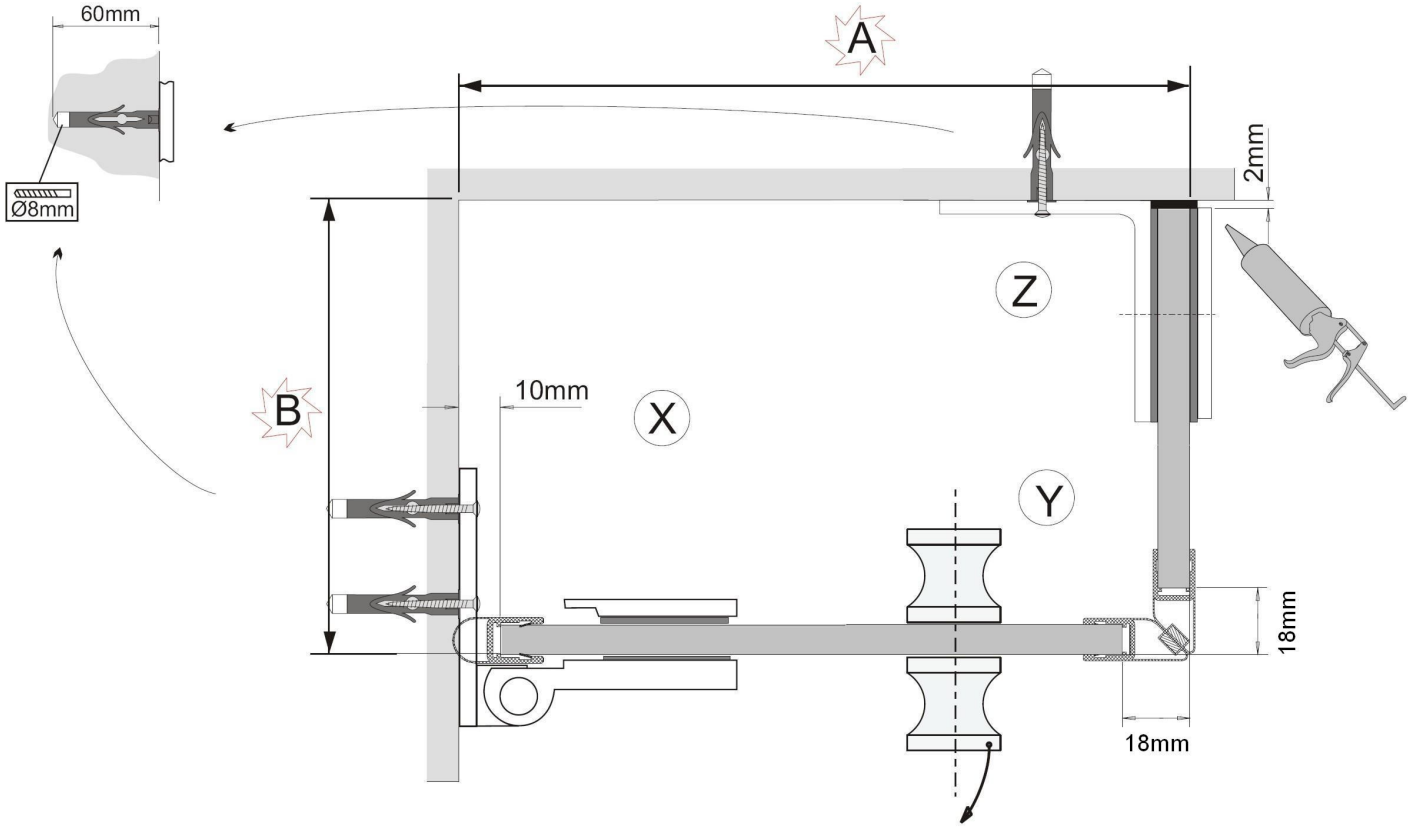

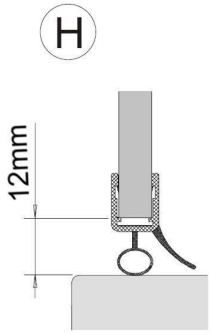

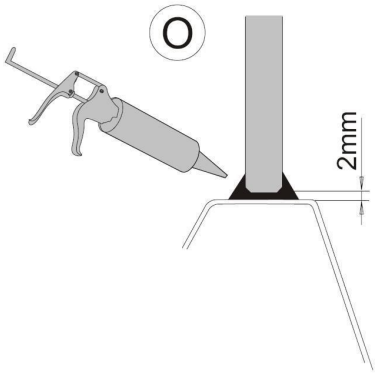

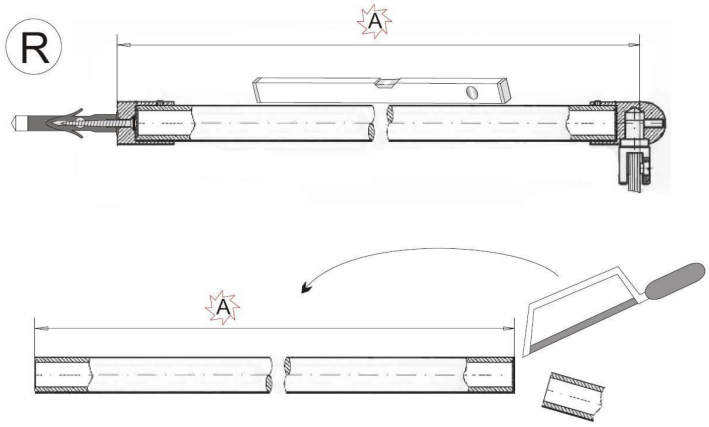

VARIOGLASS®

201

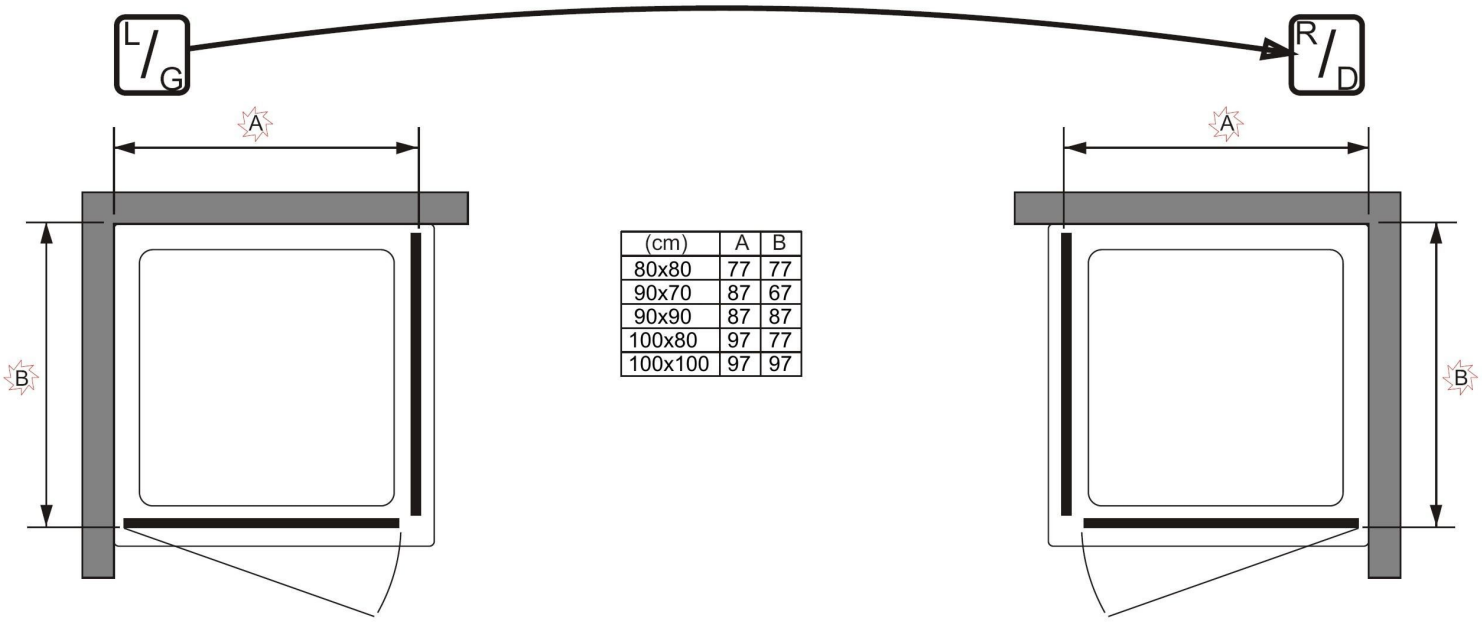
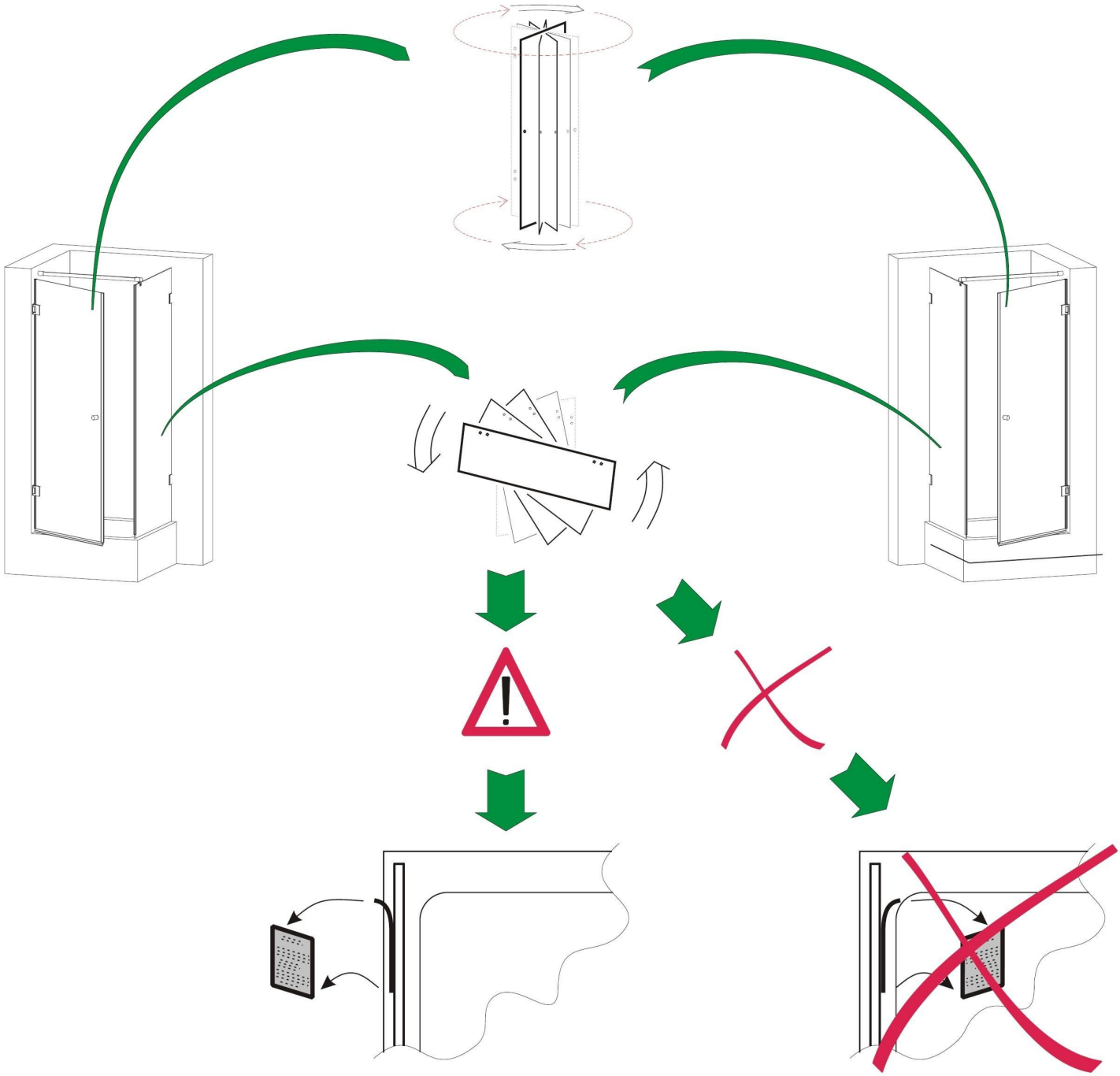
(cm)	A	B
80x80	77	77
90x70	87	67
90x90	87	87
100x80	97	77
100x100	97	97